Nezha Inventor

Control de terremotos



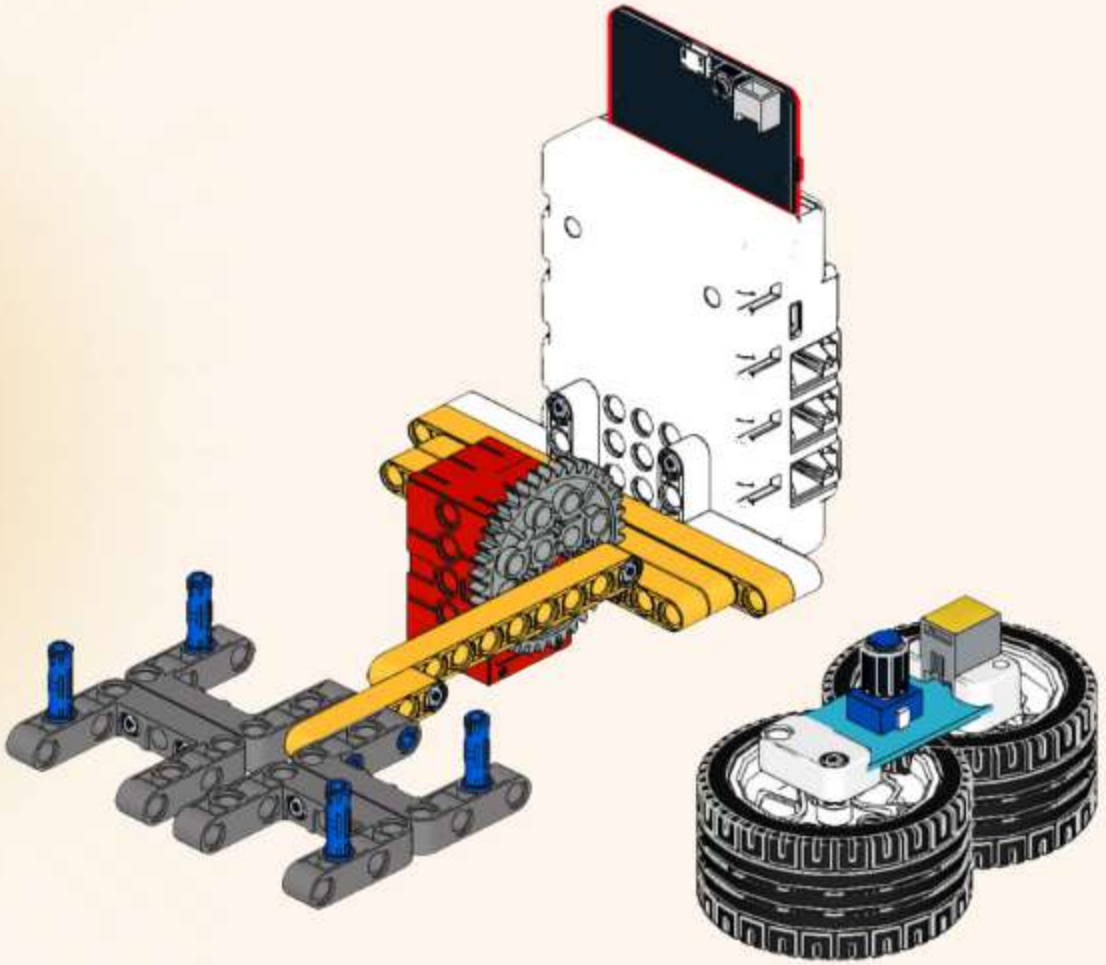

maestros
.tech

1

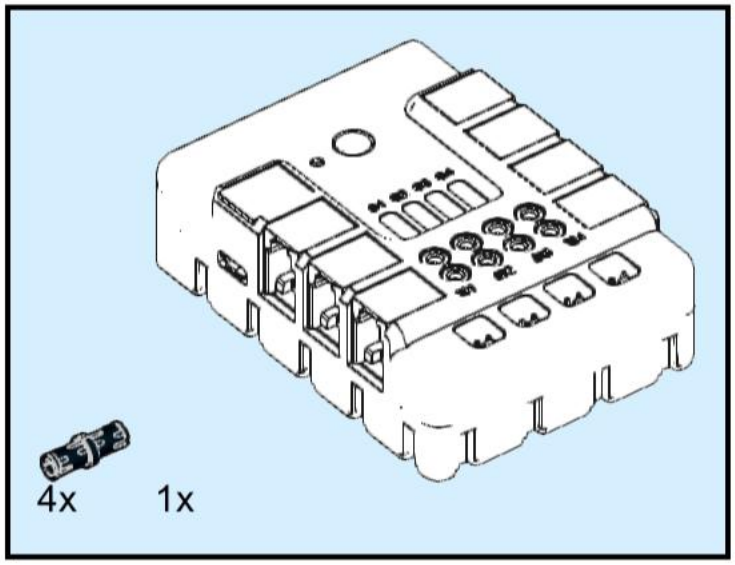

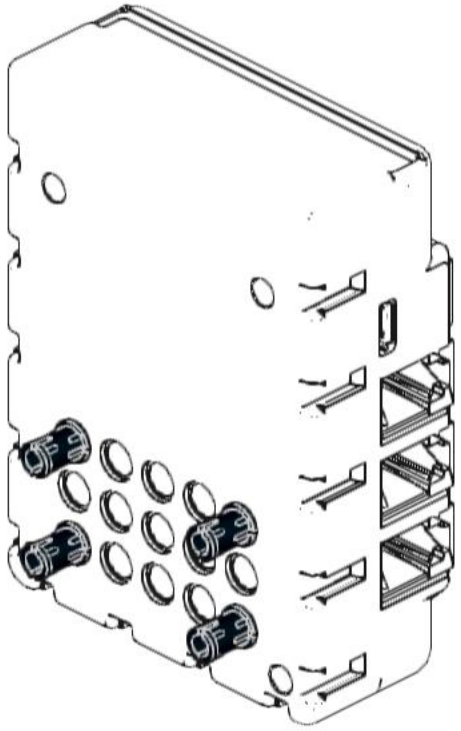

2

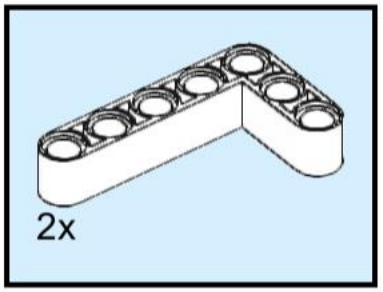

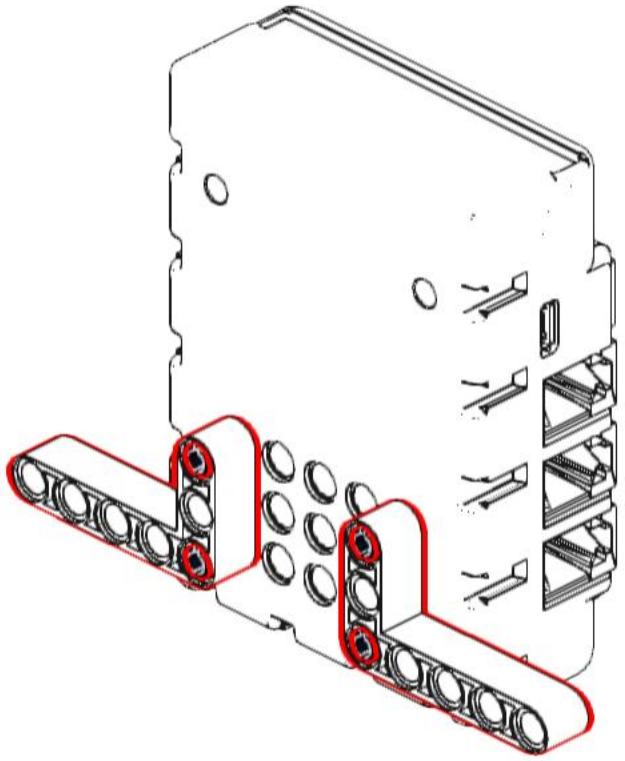

3

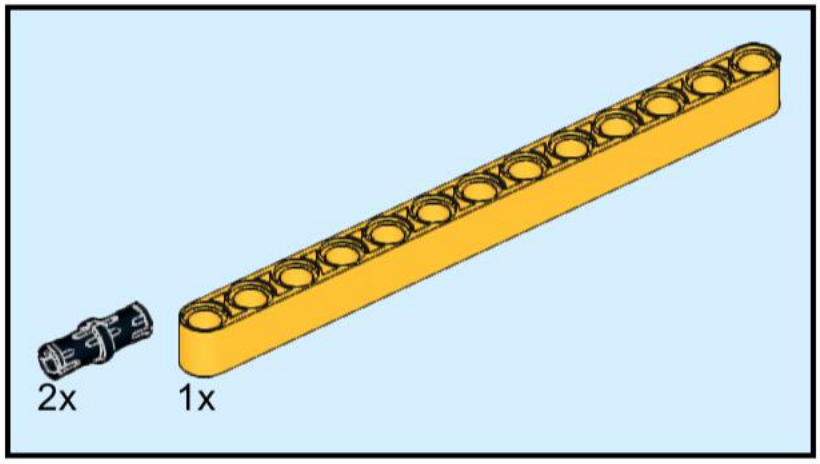

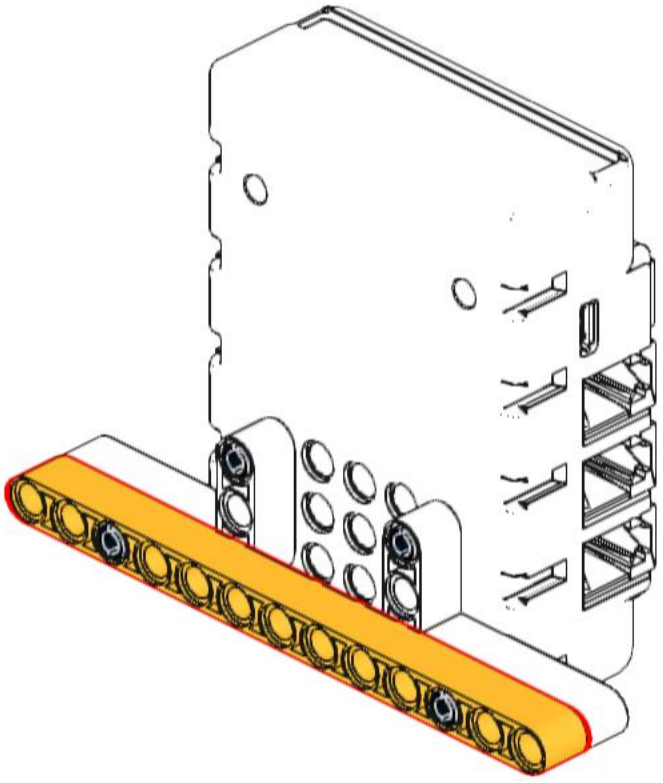

4

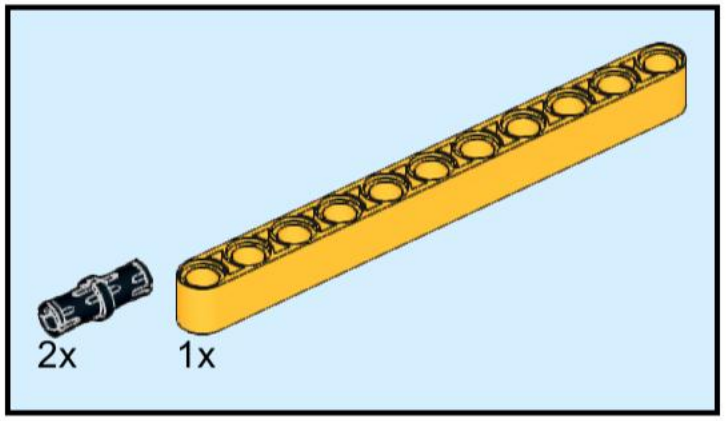

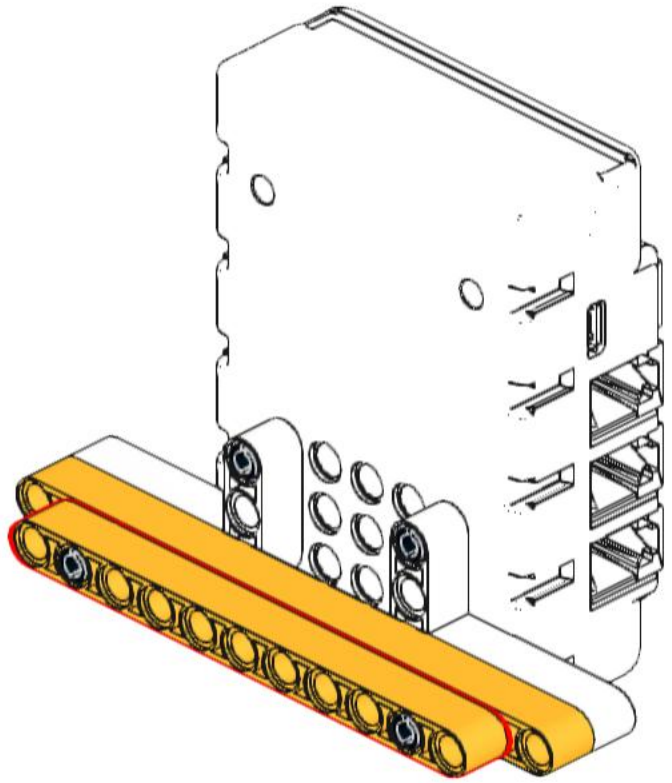

5

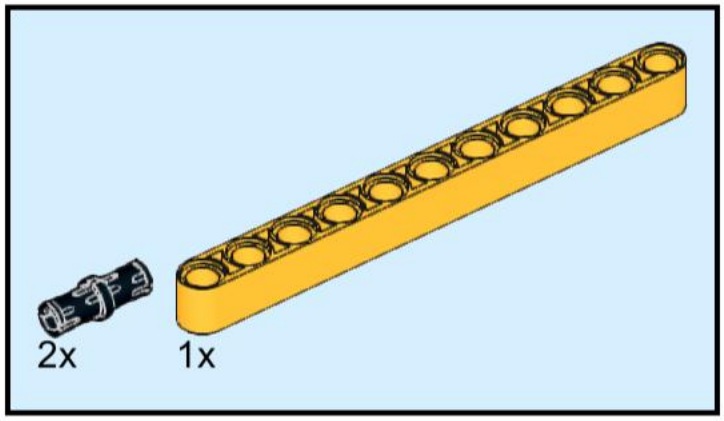

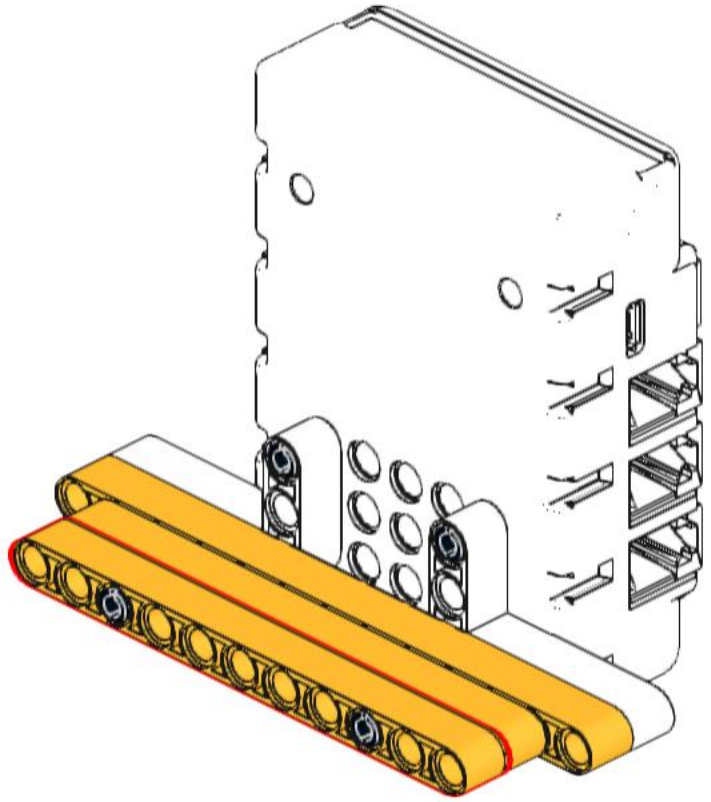

6

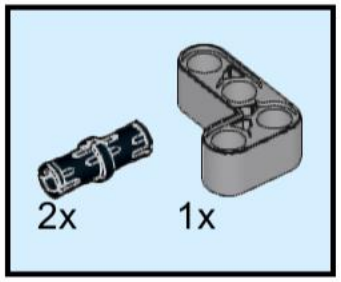

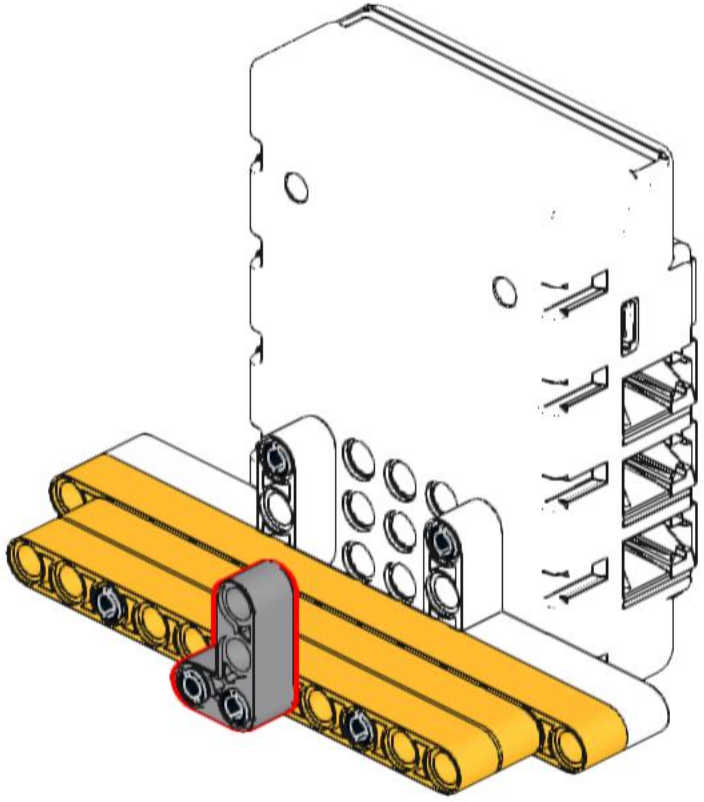

7

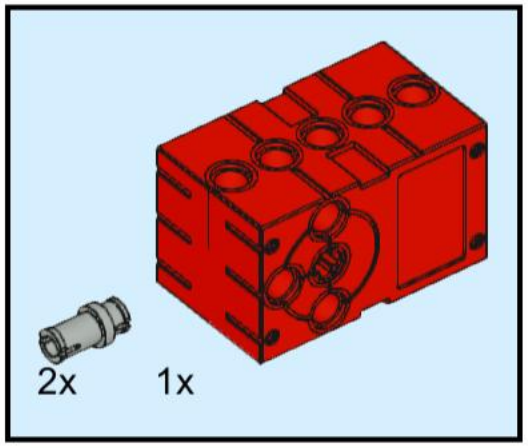

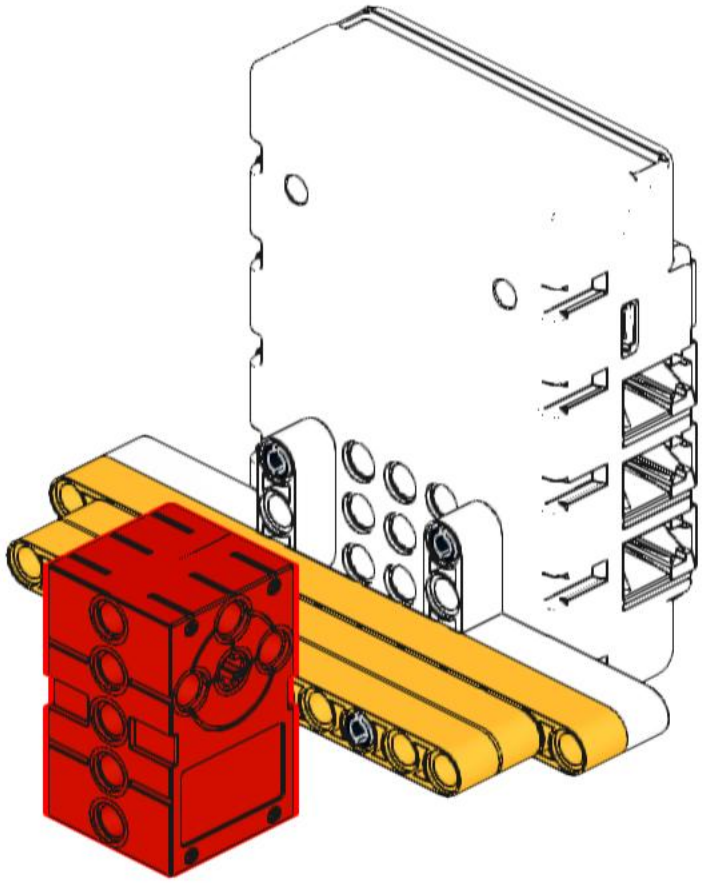

8

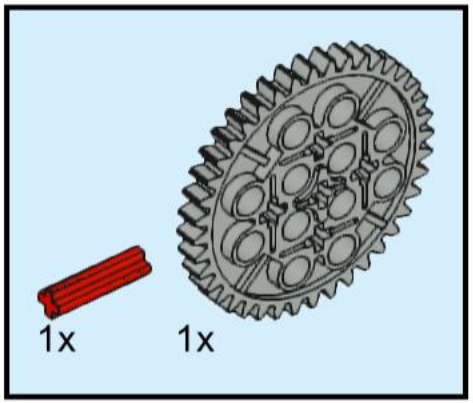

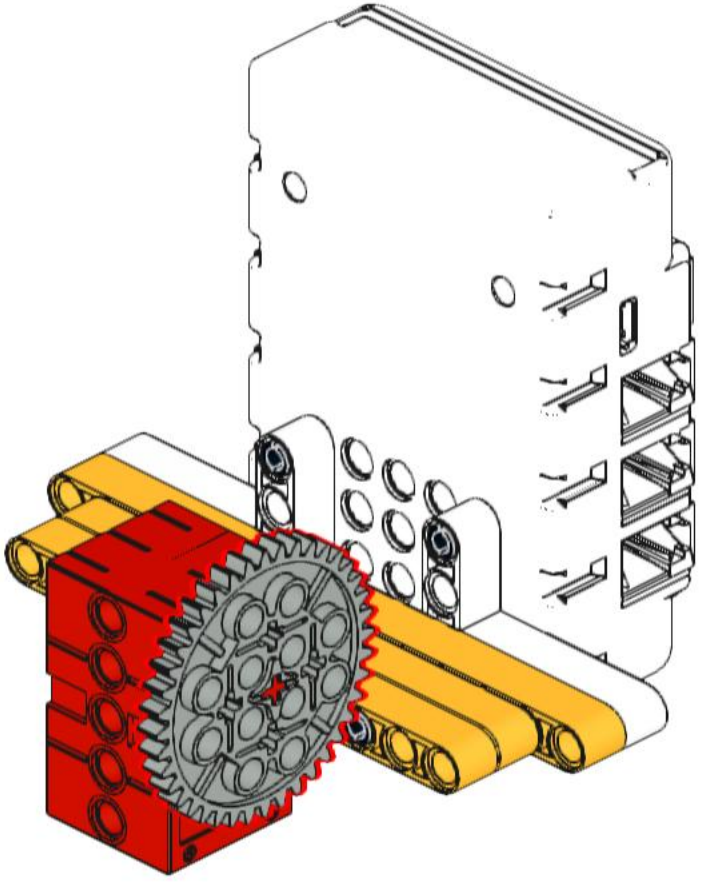

9

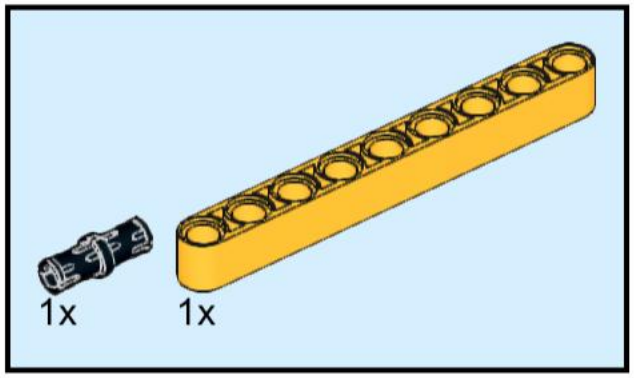

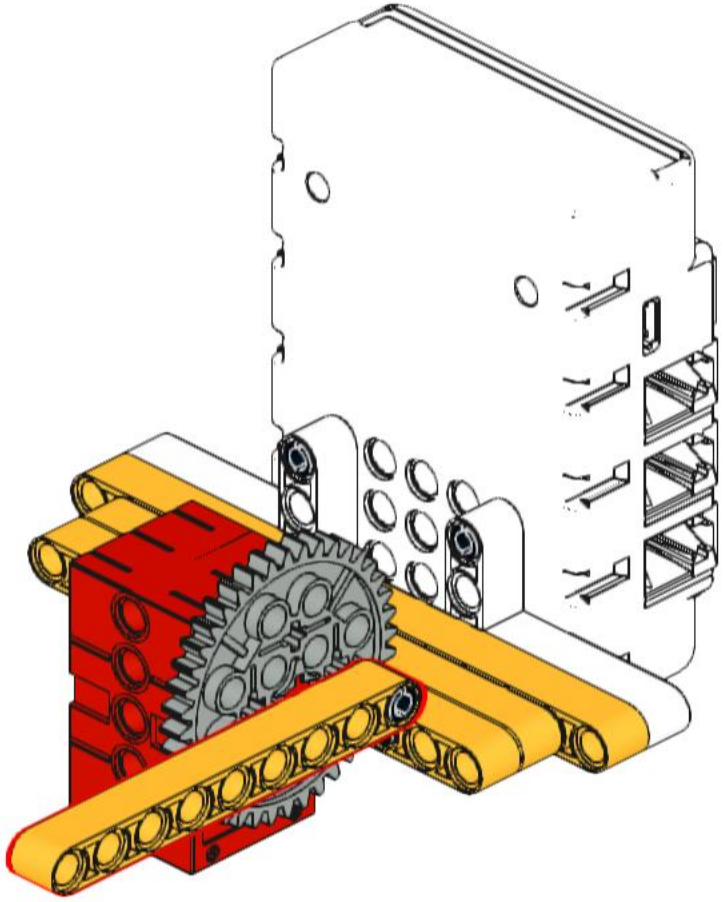

10

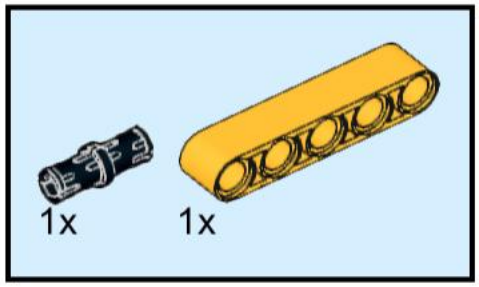

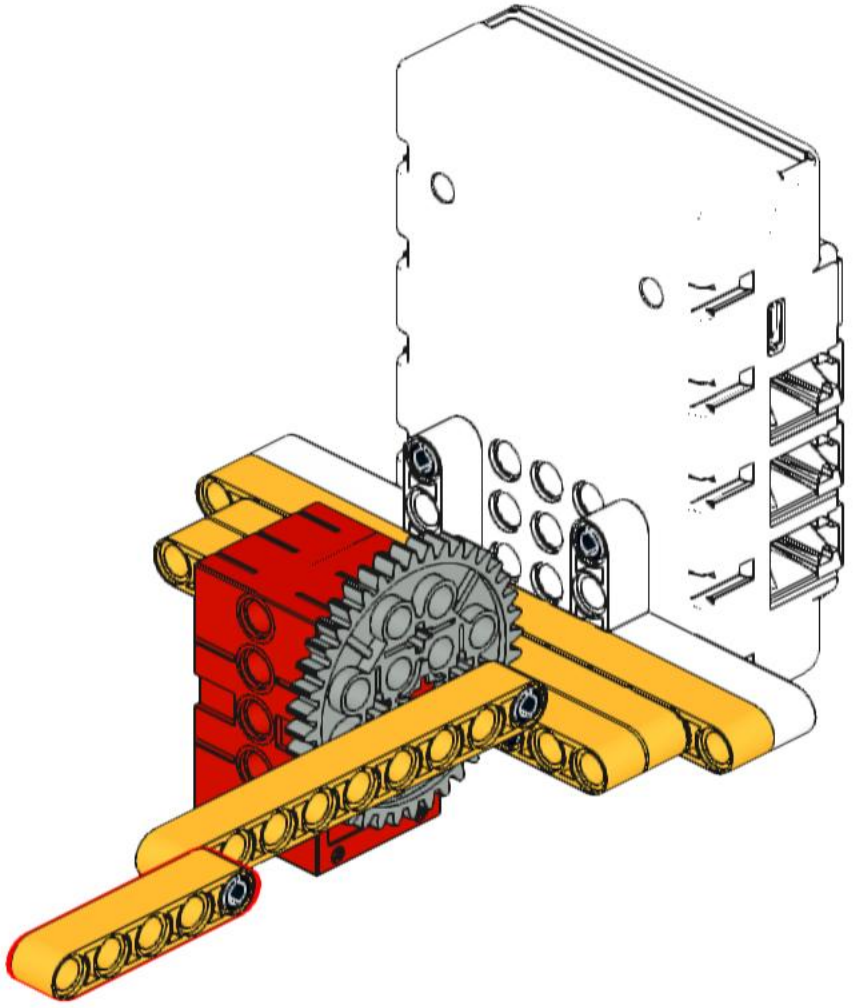

11

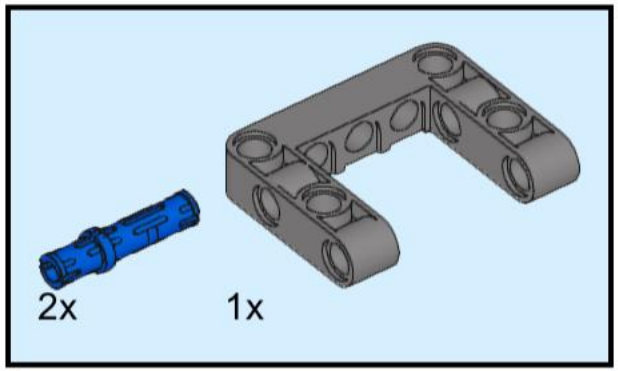

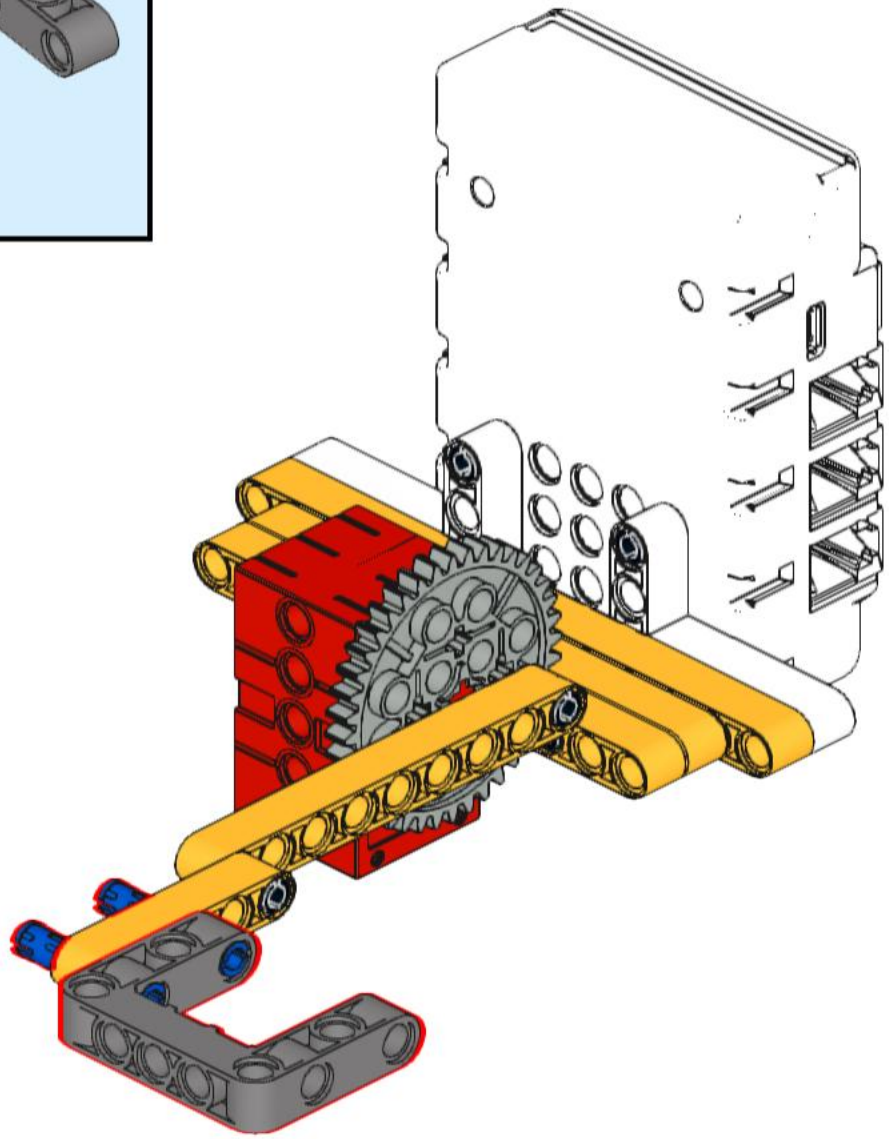

12

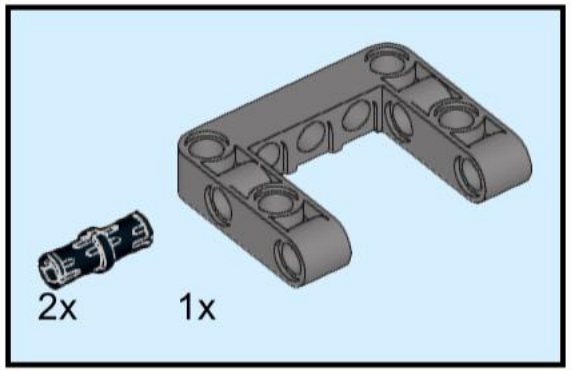

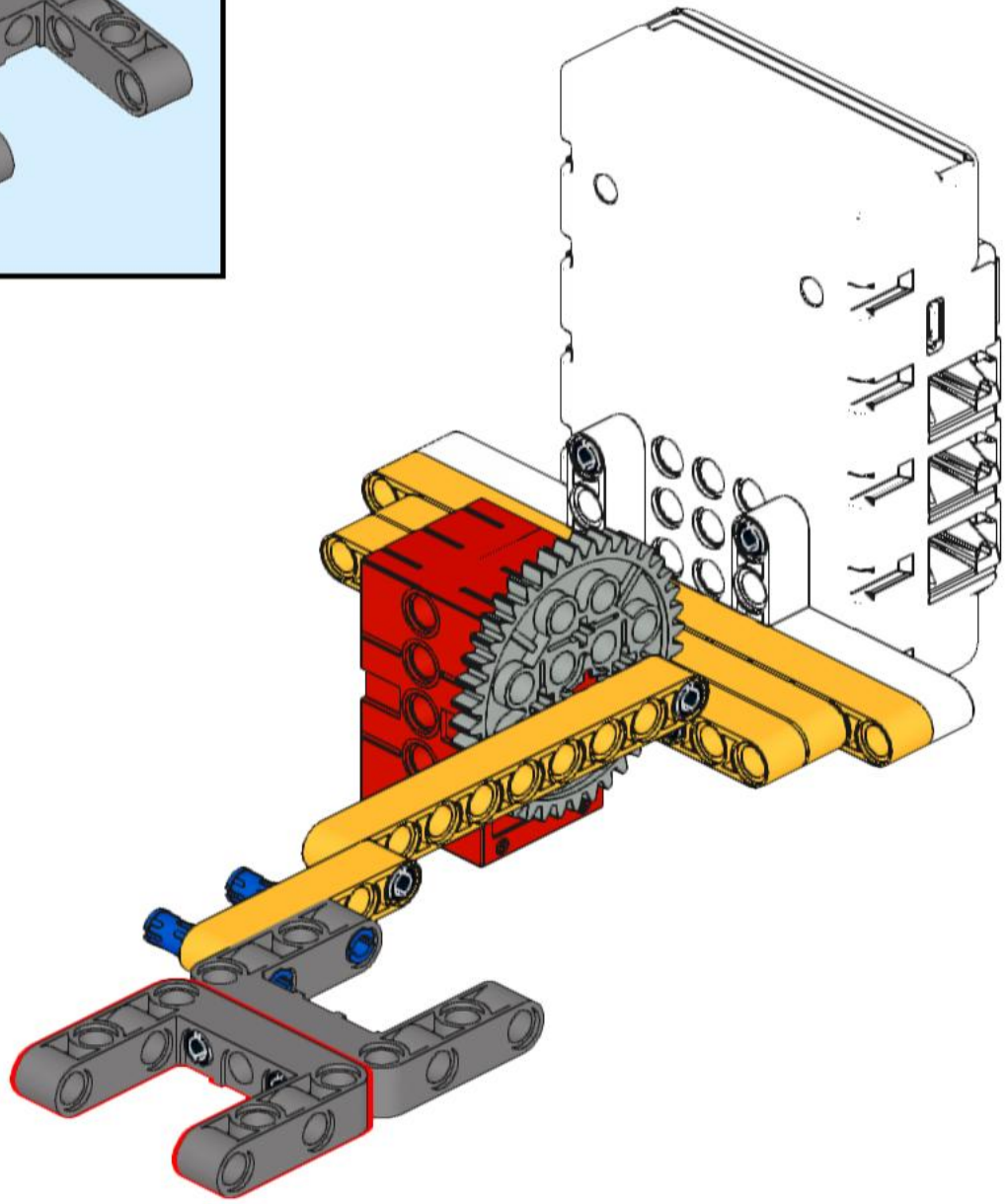

13

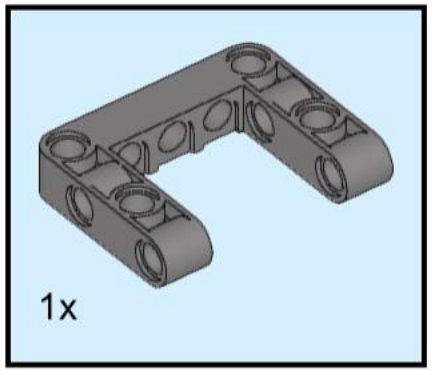

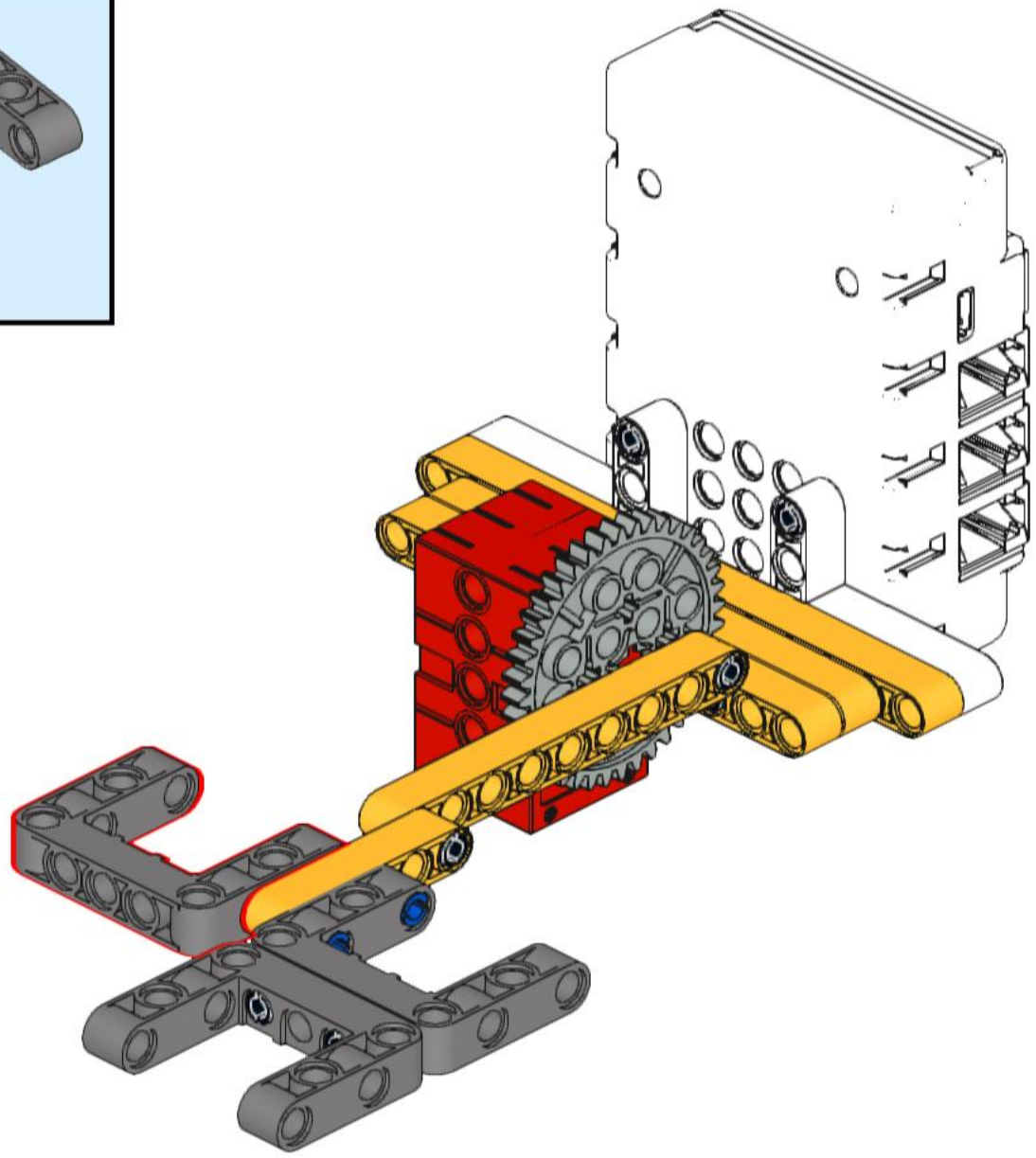

14

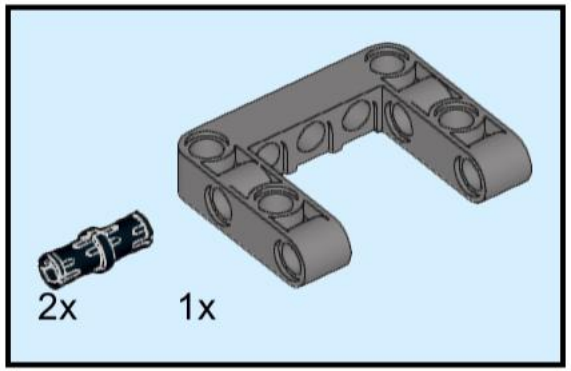

15

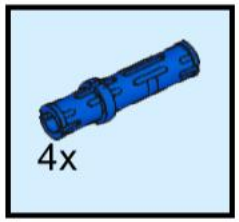

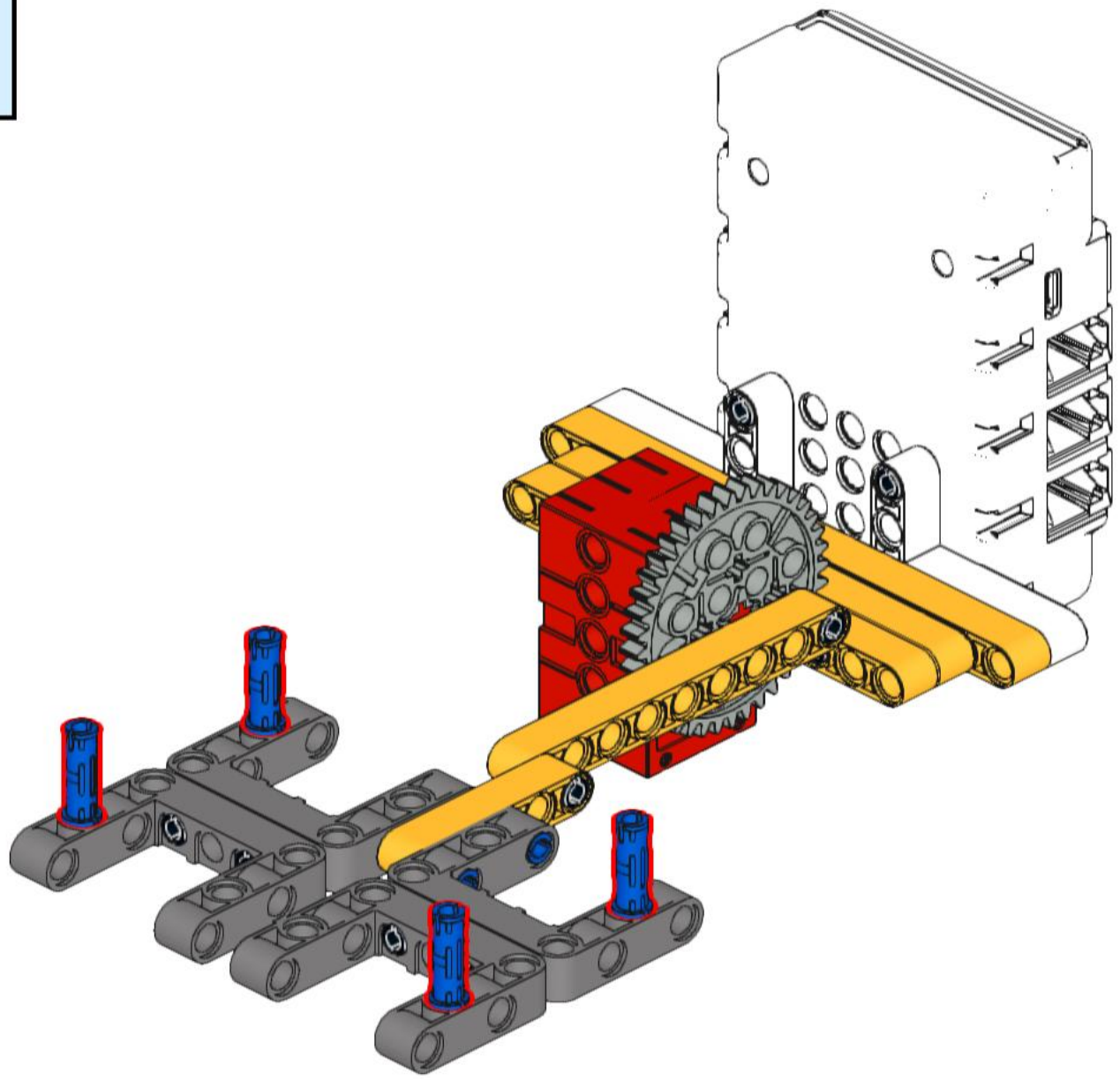

16

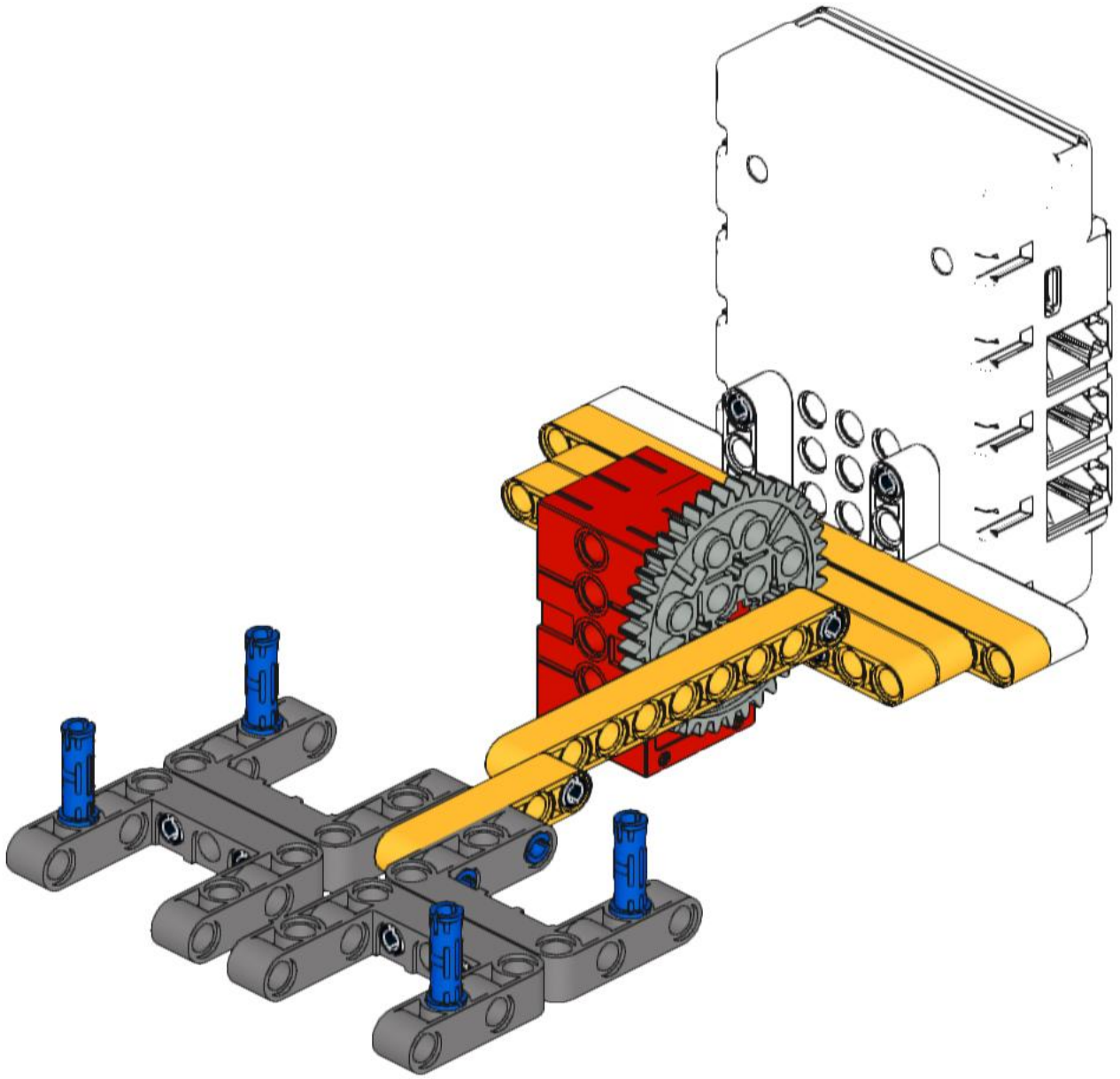

17

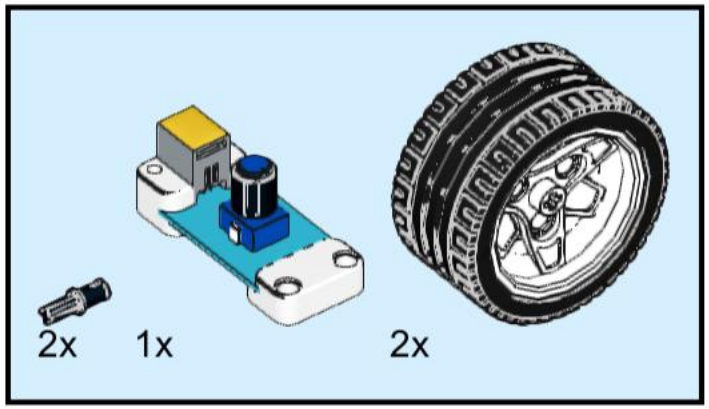

18

